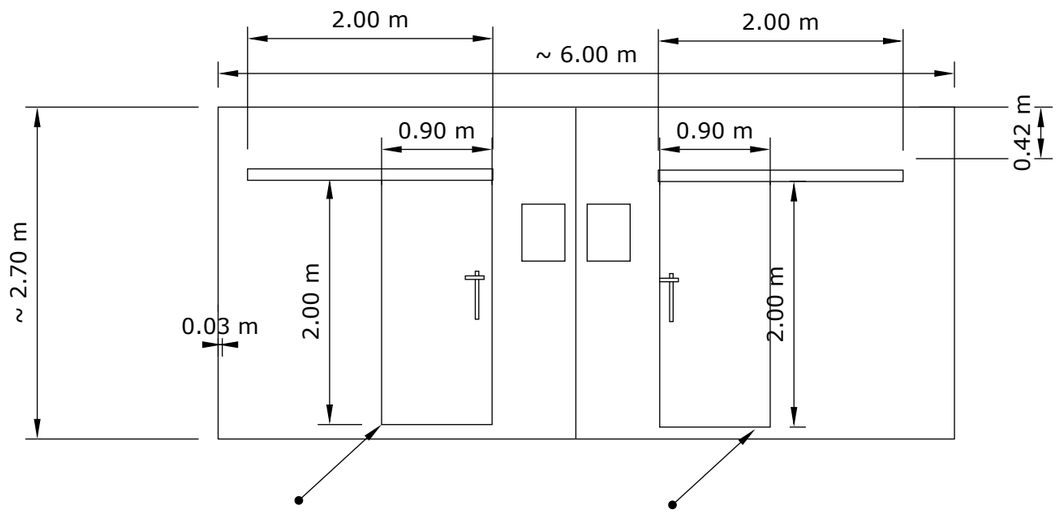

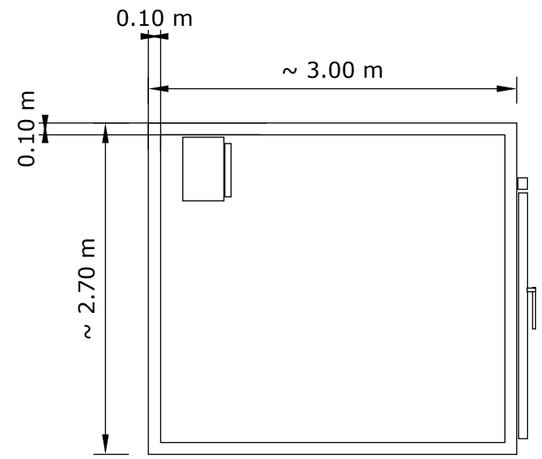

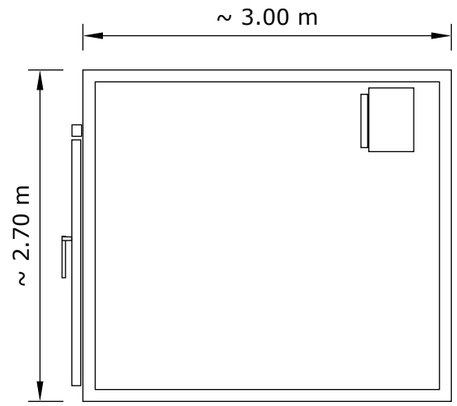

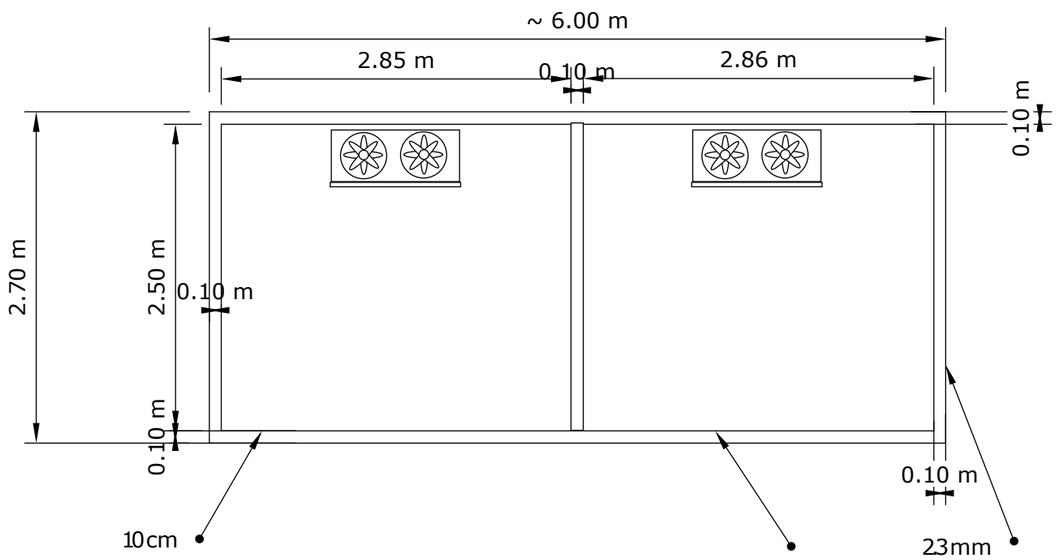

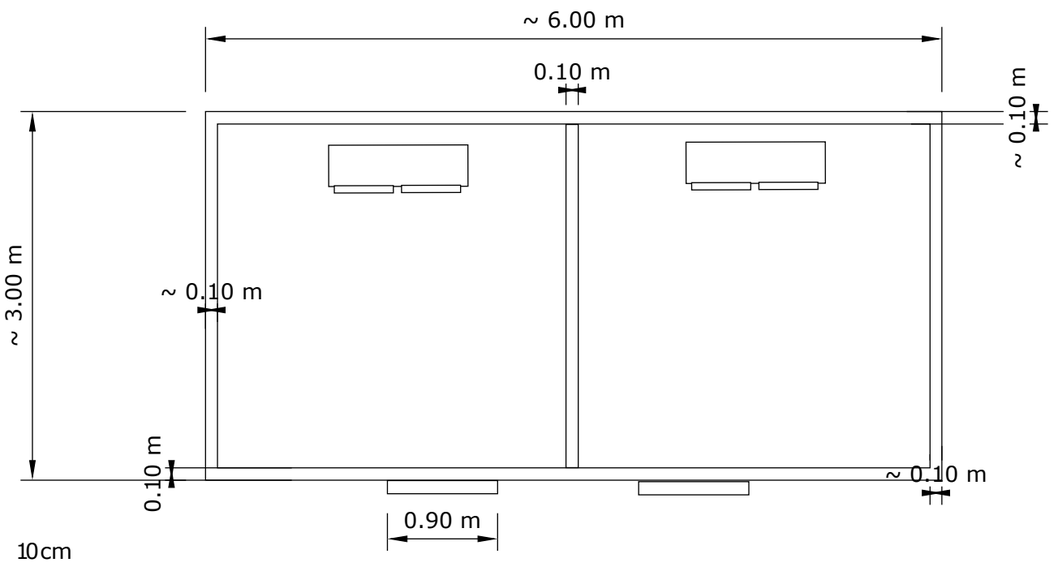

TECHLINE
COLD STOREGE