Tecumseh

Cooling for a better tomorrow

MALAYSIA
No. 18, Jalan Sultan Mohamed 4,
Selat Klang Utara,
42000 Port Klang,
Selangor Darul Ehsan,
Malaysia
Tel: +60 3 3176 3886
Fax: +60 3 3177 3890

For more information, please visit
our website
www.tecumseh.com

Tecumseh reserves the right to change information contained in this document without notification.
© 2019 Tecumseh Products Company. All rights reserved.

Tecumseh

Product Catalogue

TECUMSEH PAC³®

Built for Today. Ready for Tomorrow.

Table of Contents

Introduction 003

Nomenclature 004

Performance Data 005

Specification 009

Drawing 011

Packaging 014

Introduction

Simple Design Values in Mind

The Tecumseh Packaged Condensing Unit is designed with both reciprocating and scroll compressor technology with wide range offer. The new PAC³ is best in sustainability, flexibility and serviceability.

Features

Compact

Designed and optimized for space constrained landscapes.

Wide Offering

Capacity and application range extended to fit extensive demands.

Practical

Design suited for customer application demand.

Eco-friendly

Applicable with mid GWP compliance in accordance to the Montreal Protocol.

Nomenclature

PAC	4	5	46	Z	3
Family PACS = Single Phase PAC = Three Phase	Application 2 = Low Back Pressure 4 = High Back Pressure 9 = M/H Back Pressure	Capacity Number of digits of cooling capacity	Capacity First two digits in Rating Point Capacity @ 60Hz (46,000 Btu/h)	Refrigerant Z = R-404A, R-452A, R-448A, R-449A Y = R-134A R-513A	Version

Condensing Unit

EN13215	LBP	HP/MHBP
Evaporating Temperature	-35ºC	+5ºC
Ambient Temperature	+32ºC	+32ºC
Return Gas	+20ºC	+20ºC
Sub-cooling	3K	3K

Performance Data *(Reciprocating Technology)*

Low Temperature Application

Model	Platform	HP	Ambient Temp. (°C)	Capacity (W) Evaporating Temperature (°C)					Amb. Temp. 32°C Evap. Temp. -25°C		Current (A)		
				- 40	- 35	- 30	- 25	- 20	Power Input (W)	COP (W/W)	RLA	MCC	LRA
PACS2446Z & PAC2446Z	MINI	1.2	32	518	712	936	1192	1483	867	1.37	1Φ=4.3 3Φ=1.8	1Φ=8.5 3Φ=3.2	1Φ=30.0 3Φ=13.7
			35	484	669	883	1127	1402					
			38	449	627	830	1061	1320					
			43	393	557	743	952	1185					
PACS2464Z & PAC2464Z	MINI	1.6	32	706	957	1251	1587	1962	1145	1.39	1Φ=6.0 3Φ=2.5	1Φ=10.3 3Φ=4.1	1Φ=40.0 3Φ=16.1
			35	656	898	1179	1499	1857					
			38	607	839	1107	1412	1752					
			43	526	740	987	1267	1578					
PACS2480Z & PAC2480Z	SMALL	2.0	32	906	1311	1763	2262	2807	1707	1.33	1Φ=7.7 3Φ=3.3	1Φ=16.5 3Φ=6.9	1Φ=69.0 3Φ=24.0
			35	822	1217	1655	2137	2660					
			38	737	1122	1546	2010	2512					
			43	592	961	1362	1795	2261					
PACS2511Z & PAC2511Z	SMALL	2.8	32	1163	1683	2276	2942	3680	2248	1.31	1Φ=13.2 3Φ=4.7	1Φ=26.0 3Φ=8.0	1Φ=83.0 3Φ=29.0
			35	1047	1554	2129	2773	3485					
			38	931	1424	1981	2603	3289					
			43	737	1207	1733	2318	2961					
PAC2513Z	MEDIUM	3.3	32	1121	1726	2425	3209	4065	2489	1.29	5.0	9.3	43.0
			35	988	1568	2238	2987	3806					
			38	857	1414	2054	2769	3550					
			43	646	1164	1755	2415	3134					
PAC2516Z	MEDIUM	4.0	32	1477	2225	3100	4091	5179	2646	1.55	5.6	10.3	43.0
			35	1309	2022	2855	3798	4835					
			38	1143	1822	2613	3507	4493					
			43	875	1497	2217	3031	3931					
PAC2522Z	MEDIUM	5.5	32	2111	2991	4010	5160	6427	3298	1.56	6.5	14.2	57.0
			35	1914	2756	3745	4850	6067					
			38	1720	2541	3484	4543	5710					
			43	1402	2176	3056	4040	5126					
PAC2525Z	MEDIUM	6.3	32	2310	3276	4362	5557	6845	3731	1.49	7.1	14.1	57.0
			35	2095	3034	4084	5237	6478					
			38	1746	2637	3627	4708	5872					
			43	1541	2404	3356	4395	5511					

*** RLA: Rated Load Ampere MCC: Maximum Continuous Current LRA: Lock Rotor Ampere**

Performance Data *(Reciprocating Technology)*

High Temperature Application

Model	Platform	HP	Ambient Temp. (°C)	Capacity (W) Evaporating Temperature (°C)					Amb. Temp. 32°C Evap. Temp. -5°C		Current (A)		
				-15	- 10	- 5	0	5	Power Input (W)	COP (W/W)	RLA	MCC	LRA
PACS4460Z	MINI	0.5	32	859	1039	1241	1466	1716	592	2.10	4.9	6.5	20.2
			35	818	989	1181	1395	1631					
			38	776	939	1121	1322	1544					
			43	704	854	1019	1200	1399					
PACS9480Z & PAC9480Z	MINI	0.7	32	1146	1401	1684	1994	2328	784	2.15	1Φ=4.6 3Φ=2.1	1Φ=7.0 3Φ=3.7	1Φ=23.0 3Φ=13.3
			35	1086	1332	1603	1900	2220					
			38	1026	1262	1522	1806	2111					
			43	926	1146	1387	1649	1931					
PACS9510Z & PAC9510Z	MINI	0.8	32	1400	1694	2019	2376	2764	979	2.06	1Φ=5.7 3Φ=2.4	1Φ=8.7 3Φ=4.1	1Φ=30.0 3Φ=14.8
			35	1321	1602	1910	2248	2613					
			38	1242	1509	1801	2119	2462					
			43	1109	1353	1618	1903	2210					
PACS9513Z & PAC9513Z	MINI	1.1	32	1674	2072	2506	2972	3467	1086	2.31	1Φ=7.0 3Φ=3.1	1Φ=11.6 3Φ=4.7	1Φ=33.0 3Φ=17.0
			35	1561	1941	2352	2792	3259					
			38	1447	1809	2199	2614	3051					
			43	1257	1590	1944	2317	2706					
PACS4517Z & PAC4517Z	SMALL	1.4	32	1873	2292	2740	3217	3723	1343	2.04	1Φ=8.1 3Φ=3.8	1Φ=13.5 3Φ=4.7	1Φ=39.0 3Φ=19.0
			35	1765	2167	2594	3046	3525					
			38	1657	2042	2448	2875	3326					
			43	1476	1832	2203	2590	2995					
PACS4519Z & PAC4519Z	SMALL	1.6	32	2349	2829	3339	3881	4458	1747	1.91	1Φ=10.5 3Φ=4.8	1Φ=16.0 3Φ=6.5	1Φ=46.0 3Φ=23.0
			35	2225	2684	3169	3681	4227					
			38	2099	2537	2997	3481	3995					
			43	1886	2291	2709	3146	3610					
PACS4524Z & PAC4524Z	SMALL	2.0	32	2723	3405	4144	4932	5763	2036	2.04	1Φ=11.8 3Φ=5.4	1Φ=20.7 3Φ=8.8	1Φ=52.0 3Φ=27.0
			35	2540	3197	3904	4656	5447					
			38	2355	2985	3662	4378	5128					
			43	2038	2627	3251	3908	4594					
PACS4531Z & PAC4531Z	SMALL	2.6	32	3541	4333	5185	6094	7062	2495	2.08	1Φ=15.2 3Φ=6.4	1Φ=27.1 3Φ=9.3	1Φ=69.0 3Φ=29.0
			35	3325	4091	4909	5779	6701					
			38	3108	3848	4632	5461	6339					
			43	2744	3439	4168	4932	5735					

Performance Data *(Reciprocating Technology)*

High Temperature Application

Model	Platform	HP	Ambient Temp. (°C)	Capacity (W) Evaporating Temperature (°C)					Amb. Temp. 32°C Evap. Temp. -5°C		Current (A)		
				-15	- 10	- 5	0	5	Power Input (W)	COP (W/W)	RLA	MCC	LRA
PACS4540Z & PAC4540Z	MEDIUM	3.3	32	4645	5627	6654	7715	8799	3324	2.00	1Φ=20.6 3Φ=8.7	1Φ=28.2 3Φ=10.4	1Φ=89.2 3Φ=45.2
			35	4390	5337	6321	7332	8365					
			38	4132	5044	5985	6949	7930					
			43	3698	4553	5424	6308	7207					
PAC4546Z	MEDIUM	3.8	32	4900	6158	7527	8991	10530	3501	2.15	9.6	15.6	48.0
			35	4541	5745	7052	8445	9910					
			38	4187	5337	6581	7905	9295					
			43	3609	4670	5809	7017	8284					
PAC4553Z	MEDIUM	4.4	32	5771	7206	8769	10442	12206	3950	2.22	10.5	16.3	52.0
			35	5389	6767	8261	9857	11538					
			38	5007	6329	7757	9277	10876					
			43	4372	5606	6924	8321	9785					
PAC4561Z	LARGE	5.1	32	6327	7773	9325	10968	12688	4447	2.10	11.8	17.6	56.0
			35	5915	7307	8794	10363	12007					
			38	5502	6841	8264	9763	11332					
			43	4809	6065	7386	8770	10219					
PAC4568Z	LARGE	5.7	32	7646	9352	11206	13197	15316	4922	2.28	12.9	20.1	62.0
			35	7197	8846	10631	12542	14575					
			38	6747	8340	10055	11887	13834					
			43	5997	7495	9094	10795	12602					
PAC4573Z	LARGE	6.1	32	8167	9912	11788	13776	15857	5532	2.13	14.0	21.3	62.0
			35	7688	9359	11148	13037	15012					
			38	7206	8803	10503	12295	14165					
			43	6397	7869	9424	11053	12752					
PAC4581Z	LARGE	6.8	32	9192	11208	13351	15589	17888	6240	2.14	15.3	23.1	89.0
			35	8681	10621	12670	14804	16993					
			38	8167	10030	11987	14018	16099					
			43	7305	9042	10848	12712	14619					

*** RLA: Rated Load Ampere MCC: Maximum Continuous Current LRA: Lock Rotor Ampere**

Performance Data (Scroll Technology)

High Temperature Application

Model	Platform	HP	Ambient Temp. (°C)	Capacity (W) Evaporating Temperature (°C)					Amb. Temp. 32°C Evap. Temp. -5°C		Current (A)		
				-15	- 10	- 5	0	5	Power Input (W)	COP (W/W)	RLA	MCC	LRA
PACS4536Z & PAC4536Z	MEDIUM	3.0	32	4378	5173	6027	6935	7887	2384	2.53	1Φ = 12.7 3Φ = 5.1	1Φ = 19.0 3Φ = 6.9	1Φ = 76.0 3Φ = 45.0
			35	4187	4946	5759	6622	7526					
			38	3986	4709	5481	6298	7154					
			43	3629	4291	4993	5734	6510					
PAC4548Z	MEDIUM	4.0	32	6500	7692	9006	10440	11995	3584	2.51	7.0	10.3	60.0
			35	6219	7354	8605	9971	11452					
			38	5930	7008	8195	9493	10903					
			43	5432	6414	7497	8682	9975					
PAC4560Z	LARGE	5.0	32	7914	9351	10923	12623	14448	4172	2.62	8.0	12.2	60.0
			35	7582	8957	10459	12085	13831					
			38	7230	8540	9971	11520	13186					
			43	6599	7797	9104	10520	12048					
PAC4572Z	LARGE	6.0	32	9153	10786	12552	14438	16433	5353	2.34	9.4	14.3	65.0
			35	8755	10320	12017	13832	15758					
			38	8330	9825	11448	13189	15043					
			43	7561	8930	10423	12036	-					
PAC4584Z	LARGE	7.0	32	10035	11962	14079	16364	18791	6060	2.32	10.0	17.1	85.0
			35	9634	11477	13494	15666	17972					
			38	9240	11005	12933	15008	17213					
			43	8598	10249	12051	13999	16089					
PAC4596Z	EXTRA LARGE	8.0	32	10973	13177	15584	18104	20759	6696	2.32	12.1	18.4	117.0
			35	10433	12529	14799	17217	19748					
			38	9892	11881	14035	16331	18739					
			43	8988	10799	12760	14856	-					
PAC4611Z	EXTRA LARGE	9.0	32	12970	15504	18156	20921	23835	8251	2.20	13.6	21.0	114.0
			35	12360	14776	17301	19934	22719					
			38	11749	14046	16444	18947	21604					
			43	10723	12823	15010	17299	19748					
PAC4612Z	EXTRA LARGE	10.0	32	14964	17755	20558	23382	26328	9933	2.07	15.5	23.6	121.0
			35	14269	16932	19604	22302	25142					
			38	13574	16108	18648	21222	23959					
			43	12411	14732	17056	19428	22000					

* RLA: Rated Load Ampere MCC: Maximum Continuous Current LRA: Lock Rotor Ampere

Specification

Model	HP	Platform	Oil Type	Fan		Liquid Receiver	Diameter of Connection (mm)		Dimension (mm)			Weight (kg)
				Size	Input		Suction	Liquid	Width	Depth	Height	
PACS2446Z & PAC2446Z	1.2	MINI	POE	1 x 350mm	129W	2.35L	15.9 (5/8")	9.5 (3/8")	913	416	532	57
PACS2464Z & PAC2464Z	1.6			1 x 350mm	129W	2.35L	15.9 (5/8")	9.5 (3/8")				58
PACS2480Z & PAC2480Z	2.0	SMALL		1 x 450mm	250W	3.9L	15.9 (5/8")	9.5 (3/8")			638	78
PACS2511Z & PAC2511Z	2.8			1 x 450mm	250W	3.9L	15.9 (5/8")	9.5 (3/8")				78
PAC2513Z	3.3	MEDIUM		1 x 500mm	380W	3.9L	22.2 (7/8")	12.7 (1/2")			792	96
PAC2516Z	4.0											97
PAC2522Z	5.5			1 x 500mm	380W	3.9L	22.2 (7/8")	12.7 (1/2")				99
PAC2525Z	6.3											99

Model	HP	Platform	Oil Type	Fan		Liquid Receiver	Diameter of Connection (mm)		Dimension (mm)			Weight (kg)
				Size	Input		Suction	Liquid	Width	Depth	Height	
PACS4536Z & PAC4536Z	3.0	MEDIUM	POE	1 x 500mm	380W	3.9L	22.2 (7/8")	12.7 (1/2")	913	416	792	82
PAC4548Z	4.0											83
PAC4560Z	5.0	LARGE		2 x 450mm	2 x 250W	9.5L	22.2 (7/8")	12.7 (1/2")			1149	110
PAC4572Z	6.0											112
PAC4584Z	7.0											119
PAC4596Z	8.0	EXTRA LARGE		2 x 500mm	2 x 380W	9.5L	28.6 (1-1/8")	12.7 (1/2")			1271	140
PAC4611Z	9.0											140
PAC4612Z	10.0											141

Model	HP	Platform	Oil Type	Fan		Liquid Receiver	Diameter of Connection (mm)		Dimension (mm)			Weight (kg)
				Size	Input		Suction	Liquid	Width	Depth	Height	
PACS4460Z	0.5	MINI	POE	1 x 350mm	129W	2.35L	15.9 (5/8")	9.5 (3/8")	913	416	532	49
PACS9480Z & PAC9480Z	0.7											57
PACS9510Z & PAC9510Z	0.8											58
PACS9513Z & PAC9513Z	1.1											58
PACS4517Z & PAC4517Z	1.4	SMALL		1 x 450mm	250W	3.9L	15.9 (5/8")	9.5 (3/8")			633	63
PACS4519Z & PAC4519Z	1.6											63
PACS4524Z & PAC4524Z	2.0											80
PACS4531Z & PAC4531Z	2.6											81
PACS4540Z & PAC4540Z	3.3	MEDIUM		1 x 500mm	380W		22.2 (7/8")	12.7 (1/2")			792	89
PAC4546Z	3.8											96
PAC4553Z	4.4											98
PAC4561Z	5.0	LARGE		2 x 450mm	2 x 250W	9.5L	22.2 (7/8")	12.7 (1/2")			1149	125
PAC4568Z	5.7											126
PAC4573Z	6.0											127
PAC4581Z	6.8											127

Standard Accessories

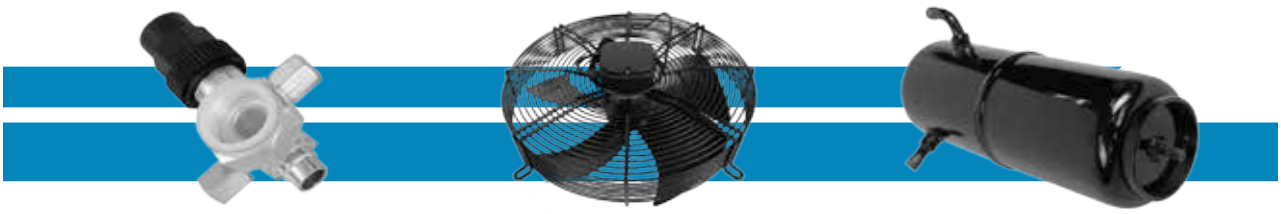

Rotalock Valve

Fan Motor

Liquid Receiver

High Low Pressure Switch

Filter Drier

Sight Glass

Optional Accessories

Drawing

PAC³ Mini

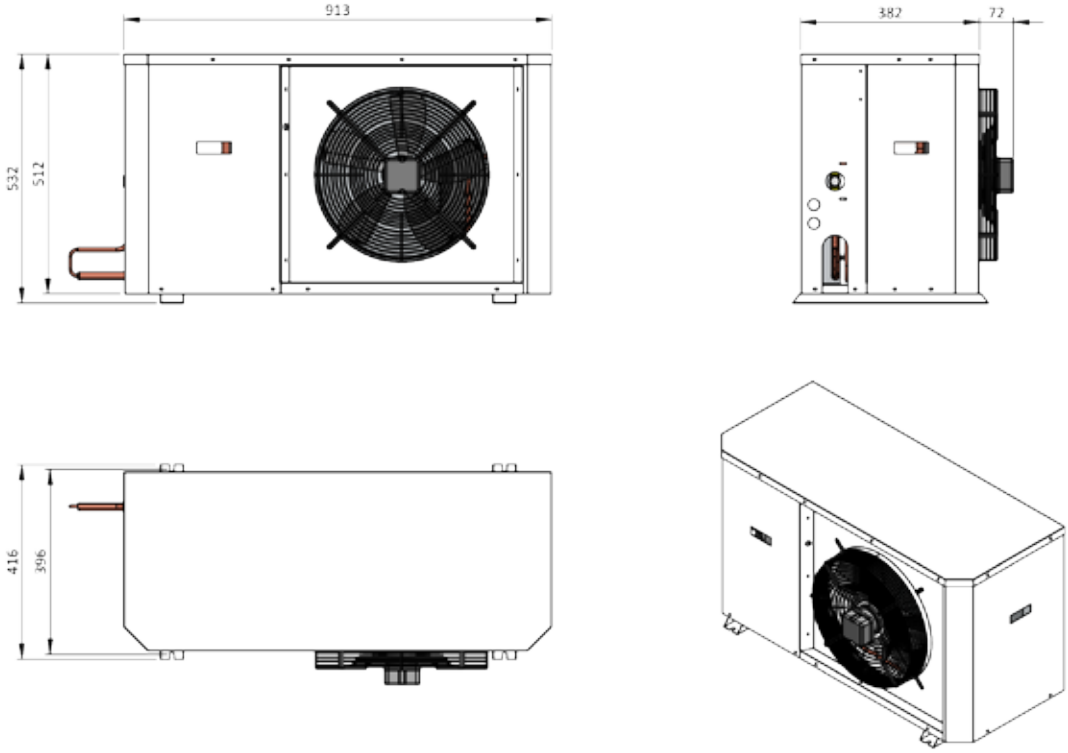

Drawing

PAC³ Small

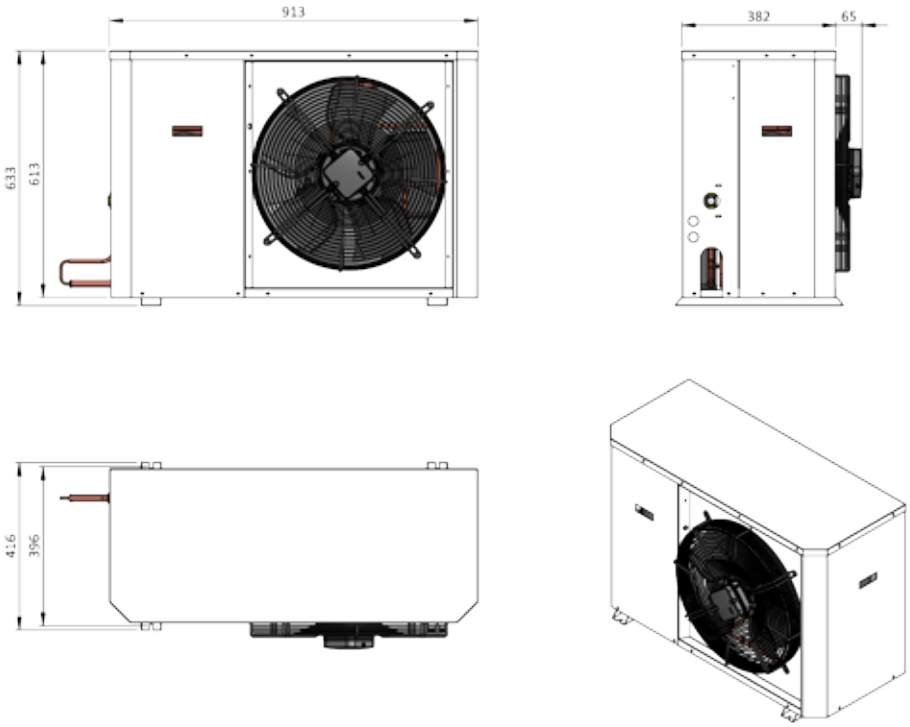

PAC³ Medium

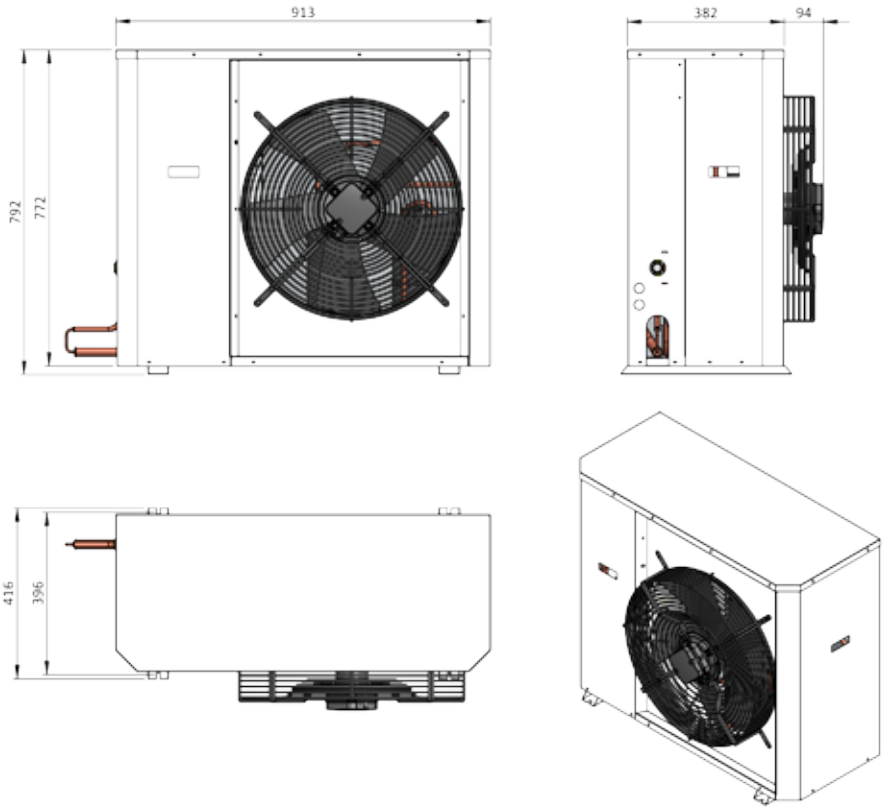

PAC³ Large

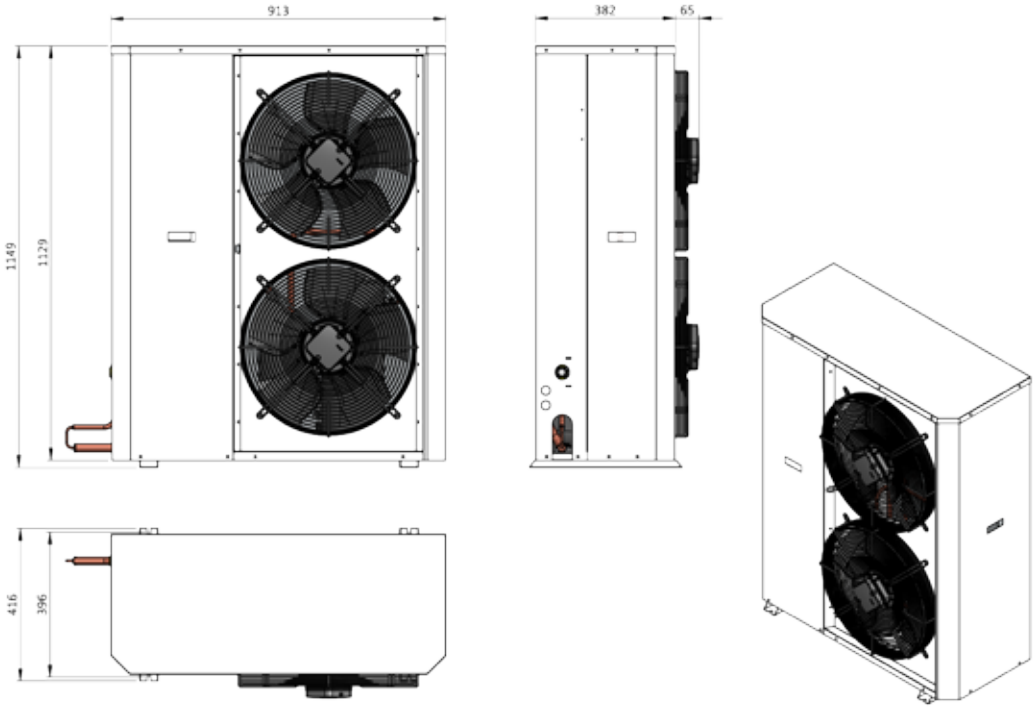

PAC³ Extra Large

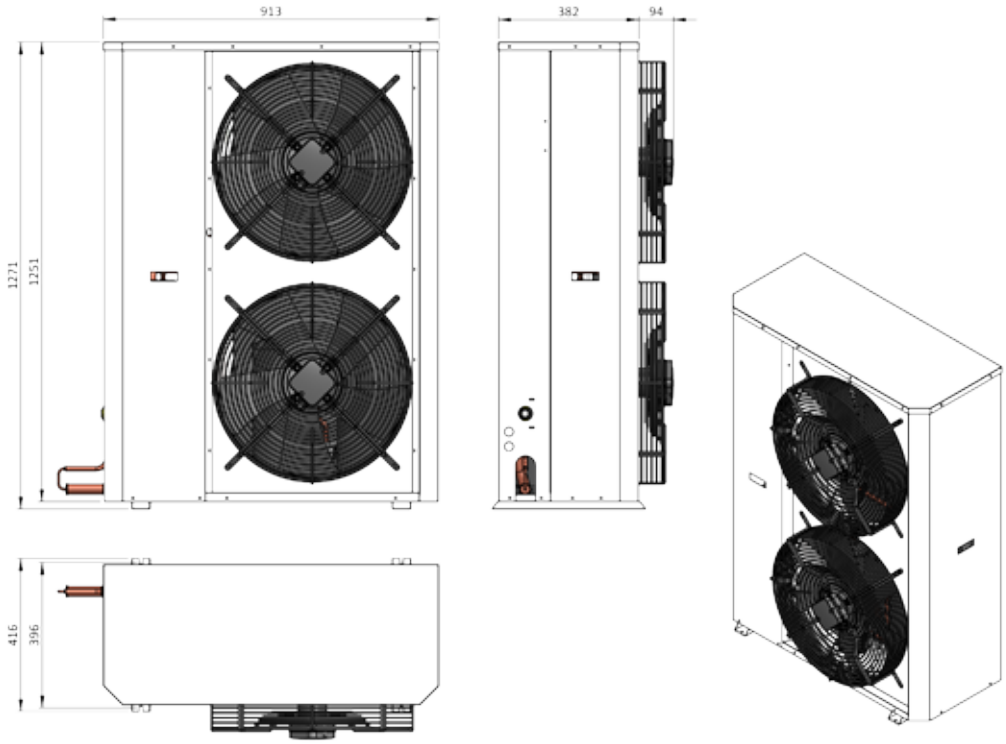

Packaging

Unit Packaging	Dimension (mm)		
	Length	Width	Height
Mini	1120	552	810
Small			995
Medium			
Large			1450
Extra Large			

Notes